CBSE Class 10 Maths Standard Question Paper 2022

Set – 1(30/1/1) Solutions

SECTION A

Question numbers 1 to 6 carry 2 marks each.

1. (a) Find the sum of first 30 terms of AP: -30, -24, -18,….. . **2**

OR

(b) In an AP if $S_n = n(4n+1)$**, then find the AP.** **2**

Ans:

(a) Given a = -30, d = 6, n = 30

We know that sum of first n terms = $S_n = \frac{N}{2}[(2a+(n-1)\times d]$

Substitute the values

$$S_{30} = \frac{30}{2}[-2(30)+(30-1)\times 6]$$

$$S_{30} = 15[-60+29\times 6]$$

$$S_{30} = 15[114] = 1710$$

OR

(b) Given $S_n = n(4n+1)$

a = $S_1 = 1(4(1)+1) = 5$

a + (a + d) = $S_2 = 2(4(2)+1) = 18$

Therefore, d = 8

Therefore, A.P. is 5, 13, 21,…

2. A solid metallic sphere of radius 10.5 cm is melted and recast into a number of smaller cones, each of radius 3.5 cm and height 3 cm . Find the number of cones so formed. 2

Ans: To solve this problem, we need to find out how many smaller cones can be made from a solid metallic sphere after it is melted and recast.

The formula to calculate the volume of a sphere is:

$$\text{Volume of a sphere} = \frac{4}{3} \times \pi \times r^3$$

Given:

Radius of the sphere, r = 10.5 cm

$$\text{Volume of the sphere} = \frac{4}{3} \times \pi \times (10.5)^3$$

$$\text{Volume of the sphere} = \frac{4}{3} \times \pi \times 1157.625 \text{ cubic cm}$$

$$\text{Volume of the sphere} = 4852.25 \times \pi \text{ cubic cm}$$

The formula to calculate the volume of a cone is:

$$\text{Volume of a cone} = \frac{1}{3} \times \pi \times r^2 \times h$$

Given:

Radius of the cone, r = 3.5 cm

Height of the cone, h = 3 cm

$$\text{Volume of one cone} = \frac{1}{3} \times \pi \times (3.5)^2 \times 3$$

$$\text{Volume of one cone} = \frac{1}{3} \times \pi \times 12.25 \times 3 \text{ cubic cm}$$

$$\text{Volume of one cone} = 12.25 \times \pi \text{ cubic cm}$$

To find the number of cones, divide the volume of the sphere by the volume of one cone:

$$\text{Number of cones} = \frac{\text{Volume of the sphere}}{\text{Volume of one cone}}$$

$$\text{Number of cones} = \frac{4852.25 \times \pi}{12.25 \times \pi}$$

$$\text{Number of cones} = \frac{4852.25}{12.25} \approx 396$$

The number of cones formed is approximately 396.

3. (a) Find the value of m for which the quadratic equation $(m-1)x^2 + 2(m-1)x + 1 = 0$ **has two real and equal roots.** **2**

OR

(b) Solve the following quadratic equation for x : **2**

$$\sqrt{3}x^2 + 10x + 7\sqrt{3} = 0$$

Ans:

(a) Given quadratic equation:

$(m-1)x^2+2(m-1)x+1=0$

For the quadratic equation to have two real and equal roots, the discriminant (Δ) must be equal to zero.

The discriminant for a quadratic equation $ax^2+bx+c=0$ is given by:

$\Delta=b^2-4ac$

Here, a = (m - 1), b = 2(m - 1), and c = 1.

Substitute these into the discriminant formula:

$\Delta=[2(m-1)]^2-4(m-1)(1)$

Simplifying:

$\Delta=4(m-1)^2-4(m-1)\backslash[$

$\Delta=4[(m-1)^2-(m-1)]$

$\Delta=4[(m-1)(m-1-1)]=4[(m-1)(m-2)]$

For the roots to be equal, set $\Delta=0$:

$4[(m-1)(m-2)]=0$

So, (m - 1)(m - 2) = 0.

This gives:

$m-1=0 \quad \text{or} \quad m-2=0$

Thus, m = 1 or m = 2.

For the equation to have two real and equal roots, m = 2.

OR

(b) Solving the quadratic equation for x:

Given quadratic equation:

$$\sqrt{3}x^2 + 10x + 7\sqrt{3} = 0$$

Using the quadratic formula:

$$x = \frac{-b \pm \sqrt{b^2 - 4ac}}{2a}$$

Where $a = \sqrt{3}$, b = 10\), and $c = 7\sqrt{3}$.

Substitute the values:

$$x = \frac{-10 \pm \sqrt{10^2 - 4(\sqrt{3})(7\sqrt{3})}}{2\sqrt{3}}$$

Simplifying:

$$x = \frac{-10 \pm \sqrt{100 - 84}}{2\sqrt{3}}$$

$$x = \frac{-10 \pm \sqrt{16}}{2\sqrt{3}}$$

$$x = \frac{-10 \pm 4}{2\sqrt{3}}$$

This gives:

$$x_1 = \frac{-10 + 4}{2\sqrt{3}} = \frac{-6}{2\sqrt{3}} = \frac{-3}{\sqrt{3}} = -\sqrt{3}$$

$$x_2 = \frac{-10 - 4}{2\sqrt{3}} = \frac{-14}{2\sqrt{3}} = \frac{-7}{\sqrt{3}} = -\frac{7\sqrt{3}}{3}$$

So, the solutions are $x = -\sqrt{3}$ and $x = -\frac{7\sqrt{3}}{3}$.

4. Find the mode of the following frequency distribution: **2**

Class	**10 – 20**	**20 – 30**	**30 – 40**	**40 – 50**	**50 – 60**
Frequency	**15**	**10**	**12**	**17**	**4**

Ans: The class with the highest frequency is known as the modal class.

Given the frequency distribution:

- Class 10–20: Frequency = 15

- Class 20–30: Frequency = 10

- Class 30–40: Frequency = 12

- Class 40–50: Frequency = 17 (Highest Frequency)

- Class 50–60: Frequency = 4

So, the modal class is 40–50.

The mode for a grouped frequency distribution is calculated using the formula:

$$\text{Mode} = L + \left(\frac{f_m - f_1}{2f_m - f_1 - f_2} \right) \times h$$

Where:

L is the lower boundary of the modal class

f_m is the frequency of the modal class

f_1 is the frequency of the class preceding the modal class

f_2 is the frequency of the class succeeding the modal class

h is the class width

For the modal class 40–50:

L = 40

$f_m = 17$

$f_1 = 12$ (frequency of the class before the modal class, which is 30–40)

$f_2 = 4$ (frequency of the class after the modal class, which is 50–60)

h = 10 (class width, as each class interval is 10 units)

Substituting into the formula:

$$\text{Mode} = 40 + \left(\frac{17-12}{2(17)-12-4}\right) \times 10$$

Simplifying:

$$\text{Mode} = 40 + \left(\frac{5}{34-16}\right) \times 10$$

$$\text{Mode} = 40 + \left(\frac{5}{18}\right) \times 10$$

$$\text{Mode} = 40 + (0.2778 \times 10)$$

$$\text{Mode} = 40 + 2.778$$

$$\text{Mode} \approx 42.78$$

The mode of the given frequency distribution is approximately 42.78.

5. The product of Rehan's age (in years) 5 years ago and his age 7 years from now, is one more than twice his present age. Find his present age. 2

Ans: Let's denote Rehan's present age as x years.

According to the problem:

Rehan's age 5 years ago = x - 5

Rehan's age 7 years from now = x + 7

The problem states that the product of these two ages is one more than twice his present age. So, we can write:

$$(x-5)(x+7)=2x+1$$

Expand the left-hand side of the equation:

$$x^2+7x-5x-35=2x+1$$

Simplify:

$$x^2+2x-35=2x+1$$

Subtract 2x from both sides:

$$x^2+2x-2x-35=1$$

This simplifies to:

$$x^2-35=1$$

Add 35 to both sides:

$$x^2=36$$

Take the square root of both sides:

$$x=\sqrt{36}=6$$

Rehan's present age is 6 years.

6. Two concentric circles are of radii 4 cm and 3 cm . Find the length of the chord of the larger circle which touches the smaller circle. 2

Ans:

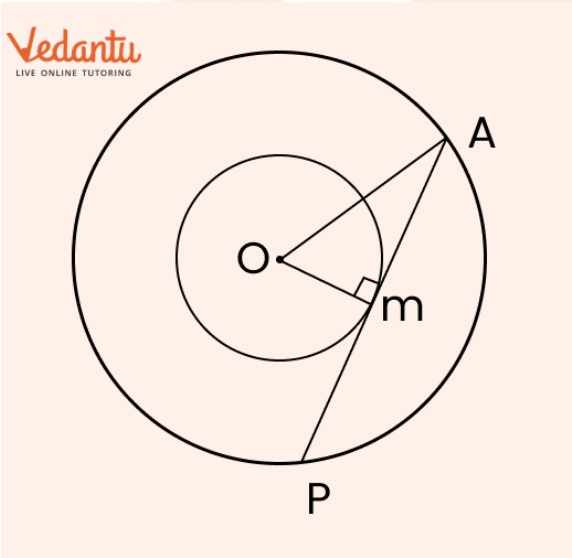

To find the length of the chord of the larger circle that touches the smaller circle.

You have two concentric circles, meaning they share the same center. The radius of the larger circle is 4 cm, and the radius of the smaller circle is 3 cm. A chord of the larger circle touches the smaller circle.

Let O be the center of both circles. Since the chord touches the smaller circle, it is tangent to it. Let's call the chord AB and the point where the chord touches the smaller circle P.

The radius drawn to a tangent at the point of tangency is perpendicular to the tangent. Therefore, OP (the radius of the smaller circle) is perpendicular to the chord AB.

Since O s the center, OP is the radius of the smaller circle (3 cm), and OA is the radius of the larger circle (4 cm). Let M be the midpoint of the chord AB.

In the right triangle OMA:

OM is the distance from the center O to the midpoint M of the chord, which equals the length of OP.

OA = 4 cm is the radius of the larger circle.

AB is the chord, so AM = $\frac{AB}{2}$.

Using the Pythagorean theorem in ΔOMA:

$$OA^2 = OM^2 + AM^2$$

Substitute the values:

$$4^2 = 3^2 + AM^2$$

Simplify:

$$16 = 9 + AM^2$$

$$AM^2 = 16 - 9 = 7$$

$$AM = \sqrt{7} \text{ cm}$$

Since AB = 2 × AM:

$$AB = 2 \times \sqrt{7} \text{ cm}$$

The length of the chord AB of the larger circle, which touches the smaller circle, is $2\sqrt{7}$ cm.

SECTION B

Question numbers 7 to 10 carry 3 marks each.

7. For what value of x, is the median of the following frequency distribution $34 \cdot 5$ **?** **3**

Class	**Frequency**
0 – 10	**3**
10 – 20	**5**
20 – 30	**11**
30 – 40	**10**
40 – 50	**x**
50 – 60	**3**
60 – 70	**2**

Ans: Identify the median class

The median is given as 34.5, so the median class is the class interval where the median lies. Since 34.5 lies in the class interval 30 – 40, this is the median class.

Let's first calculate the cumulative frequency (CF) up to the median class.

Class	**Frequency**	**Cumulative Frequency (CF)**
0 – 10	3	3
10 – 20	5	3 + 5 = 8

20 – 30	11	8 + 11 = 19
30 – 40	10	19 + 10 = 29
40 – 50	x	29 + x
50 – 60	3	29 + x + 3 = 32 + x
60 – 70	2	32 + x + 2 = 34 + x

The formula for the median is:

$$\text{Median} = L + \left(\frac{\frac{N}{2} - CF}{f} \right) \times h$$

Where:

L is the lower boundary of the median class

N is the total number of observations

CF is the cumulative frequency of the class before the median class

f is the frequency of the median class

h is the class width

Given:

L = 30 (lower boundary of the median class 30 – 40)

CF = 19 (cumulative frequency of the class before 30 – 40)

f = 10 (frequency of the median class)

h = 10 (class width)

Also, we know that the median is 34.5, so:

$$34.5 = 30 + \left(\frac{\frac{N}{2} - 19}{10} \right) \times 10$$

The total number of observations N is:

$$N = 3 + 5 + 11 + 10 + x + 3 + 2 = 34 + x$$

Now, substitute N = 34 + x into the formula:

$$34.5 = 30 + \left(\frac{\frac{34 + x}{2} - 19}{10} \right) \times 10$$

Simplify the equation:

$$34.5 = 30 + \left(\frac{17 + \frac{x}{2} - 19}{1} \right)$$

$$34.5 = 30 + \left(\frac{x}{2} - 2 \right)$$

Subtract 30 from both sides:

$$4.5 = \frac{x}{2} - 2$$

Add 2 to both sides:

$$6.5 = \frac{x}{2}$$

Multiply both sides by 2:

$x = 13$

The value of x that makes the median of the frequency distribution 34.5 is 13.

8. Draw a circle of radius 3 cm . Take two points P and Q on one of its extended diameter each at a distance of 7 cm from its centre. Construct tangents to the circle from these two points P and Q . 3

Ans: The required circle is

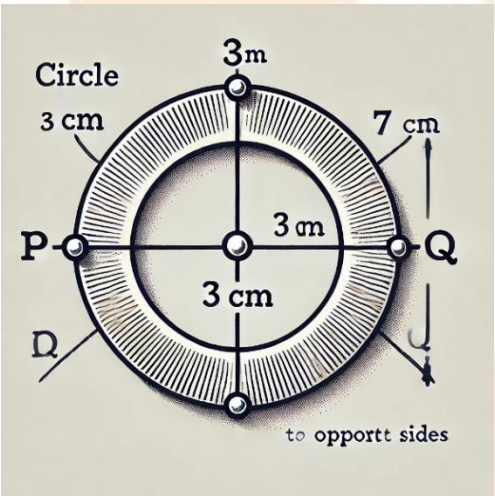

9. (a) The angle of elevation of the top of a building from the foot of the tower is 30° and the angle of elevation of the top of the tower from the foot of the building is 60°. If the tower is 50 m high, then find the height of the building.

OR

(b) From a point on a bridge across a river, the angles of depression of the banks on opposite sides of the river are 30° and 45° respectively. If the bridge is at a height of 3 m from the banks, then find the width of the river. 3

Ans:

(a) Given:

The angle of elevation of the top of the building from the foot of the tower is 30°

The angle of elevation of the top of the tower from the foot of the building is 60°

The height of the tower is 50 m.

Let the height of the building be h meters and the distance between the building and the tower be d meters.

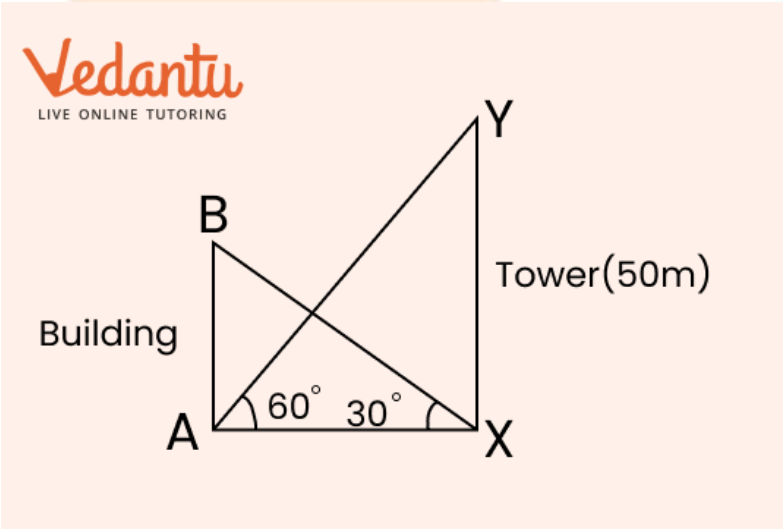

From the foot of the building, the angle of elevation to the top of the tower is 60°:

$$\tan(60^\circ) = \frac{\text{Height of the tower}}{\text{Distance between building and tower}} = \frac{50}{d}$$

$$\sqrt{3} = \frac{50}{d}$$

$$d = \frac{50}{\sqrt{3}} \approx 28.87 \text{ meters}$$

From the foot of the tower, the angle of elevation to the top of the building is 30°:

$$\tan(30^\circ) = \frac{\text{Height of the building}}{d} = \frac{h}{\frac{50}{\sqrt{3}}}$$

$$\frac{1}{\sqrt{3}} = \frac{h \cdot \sqrt{3}}{50}$$

$$h \cdot \sqrt{3} = \frac{50}{\sqrt{3}}$$

$$h = \frac{50}{3} \approx 16.67 \text{ meters}$$

The height of the building is approximately 16.67 meters.

OR

(b)

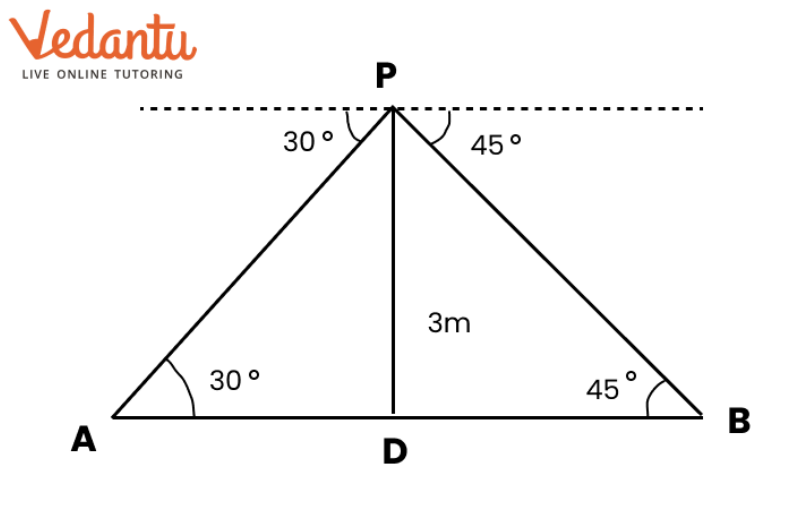

Given:

The angles of depression of the banks on opposite sides of the river are 30° and 45°.

The height of the bridge above the river is 3 m.

Let the width of the river be the sum of the distances d_1 and d_2 from the point on the bridge to each bank.

$$\tan(30^{\circ}) = \frac{\text{Height of the bridge}}{\text{Distance to the first bank}} = \frac{3}{d_1}$$

$$\frac{1}{\sqrt{3}} = \frac{3}{d_1}$$

$$d_1 = 3\sqrt{3} \approx 5.20 \text{ meters}$$

$$\tan(45^{\circ}) = \frac{\text{Height of the bridge}}{\text{Distance to the second bank}} = \frac{3}{d_2}$$

$1 = \frac{3}{d_2}$

$d_2 = 3$ meters

Width of the river $= d_1 + d_2 = 5.20 + 3 = 8.20$ meters

The width of the river is approximately 8.20 meters.

10. Following is the daily expenditure on lunch by 30 employees of a company :

Daily Expenditure (in Rupees)	**Number of Employees**
100 – 120	8
120 – 140	3
140 – 160	8
160 – 180	6
180 – 200	5

Find the mean daily expenditure of the employees. **3**

Ans: Mean $= \frac{\sum f_i x_i}{\sum f_i}$

Where:

f_i is the frequency of each class.

x_i is the midpoint of each class interval.

$\sum f_i$ is the sum of all frequencies.

The midpoint x_i of each class interval is calculated as:

$$x_i = \frac{\text{Lower limit of the class} + \text{Upper limit of the class}}{2}$$

For each class:

100 – 120: $x_1 = \frac{100+120}{2} = 110$

120 – 140: $x_2 = \frac{120+140}{2} = 130$

140 – 160: $x_3 = \frac{140+160}{2} = 150$

160 – 180: $x_4 = \frac{160+180}{2} = 170$

180 – 200: $x_5 = \frac{180+200}{2} = 190$

Now, multiply each midpoint by the corresponding frequency:

Class Interval	**Midpoint (x_i)**	**Frequency (f_i)**	$f_i x_i$
100 – 120	110	8	880
120 – 140	120	3	390
140 – 160	150	8	1200
160 – 180	170	6	1020
180 – 200	190	5	950

Sum of frequencies: $\sum f_i = 8+3+8+6+5 = 30$

Sum of $f_i x_i$: $\sum f_i x_i = 880+390+1200+1020+950 = 4440$

$$\text{Mean} = \frac{4440}{30} = 148 \text{ Rupees}$$

The mean daily expenditure of the employees is 148 Rupees.

SECTION C

Question numbers 11 to 14 carry 4 marks each.

11. (a) From a solid cylinder of height 30 cm and radius 7 cm , a conical cavity of height 24 cm and same radius is hollowed out. Find the total surface area of the remaining solid. 4

OR

(b) Water in a canal, 8 m wide and 6 m deep, is flowing with a speed of $12\,\text{km}/hour$ **. How much area will it irrigate in one hour, if 0.05 m of standing water is required ? 4**

Ans:

(a) Given:

- Height of the solid cylinder $h_1 = 30$
- Radius of the solid cylinder r = 7
- Height of the conical cavity $h_2 = 24$ cm

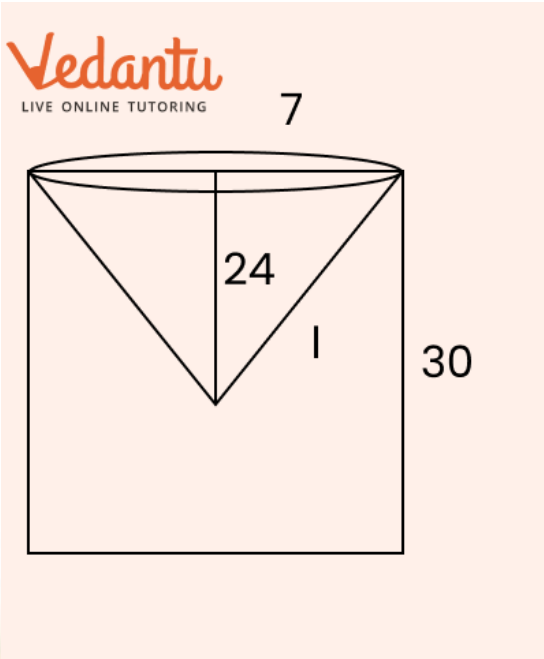

When a conical cavity is hollowed out from a solid cylinder, the remaining solid has three surfaces:

1. The curved surface of the cylinder.
2. The top surface of the cylinder (circular base).
3. The curved surface area of the conical cavity.

CSA of the cylinder $= 2\pi r h_1 = 2\pi \times 7 \times 30 = 420\pi \text{ cm}^2$

Area of the top circular base $= \pi r^2 = \pi \times 7^2 = 49\pi \text{ cm}^2$

The slant height l of the conical cavity is calculated using the Pythagorean theorem:

$= \sqrt{r^2 + h_2^2} = \sqrt{7^2 + 24^2} = \sqrt{49 + 576} = \sqrt{625} = 25 \text{ cm}$

CSA of the conical cavity $= \pi r l = \pi \times 7 \times 25 = 175\pi \text{ cm}^2$

The total surface area of the remaining solid is the sum of the curved surface area of the cylinder, the top circular base, and the curved surface area of the conical cavity:

Total Surface Area $=$ CSA of cylinder $+$ Area of top circular base $+$ CSA of conical cavity

$$Total\ Surface\ Area = CSA\ of\ \ cylinder + Area\ of\ \ top\ circular\ base + CSA\ of\ \ conical\ \ cavity$$

$$= 420p + 49p + 175p = 644p\ cm2 = 420\pi + 49\pi + 175\pi = 644\pi\ \text{cm}^2$$

Substituting $\pi = \frac{22}{7}$

Total Surface Area $= 644 \times \frac{22}{7} = 2024.57\ \text{cm}^2 \approx 2024.6\ \text{cm}^2$

The total surface area of the remaining solid is approximately **2024.6 cm2^22**.

OR

(b) Given:

- Width of the canal b = 8
- Depth of the canal d = 6
- Speed of the water flow v = 12 km/hr = 12000 m/hr
- Required standing water h = 0.05

V = Area of cross-section of canal × Length of the canal in one

Area of cross-section = b × d = 8 × 6 = 48 m^2

Length of the canal in one hour = v = 12000 m

So, the volume of water:

V = 48 × 12000 = 576000 m^3

A = Volume of waterRequired standing water height = $\frac{576000}{0.05}$ = m^2

The area that will be irrigated in one hour is 11,520,000 m².

12. In Figure 1, a triangle ABC with $\angle B = 90^\circ$ is shown. Taking AB as diameter, a circle has been drawn intersecting AC at point P. Prove that the tangent drawn at point P bisects BC . 4

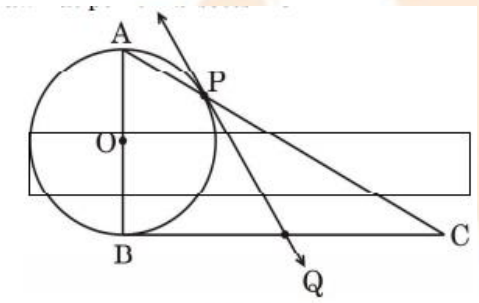

Figure 1

Ans:

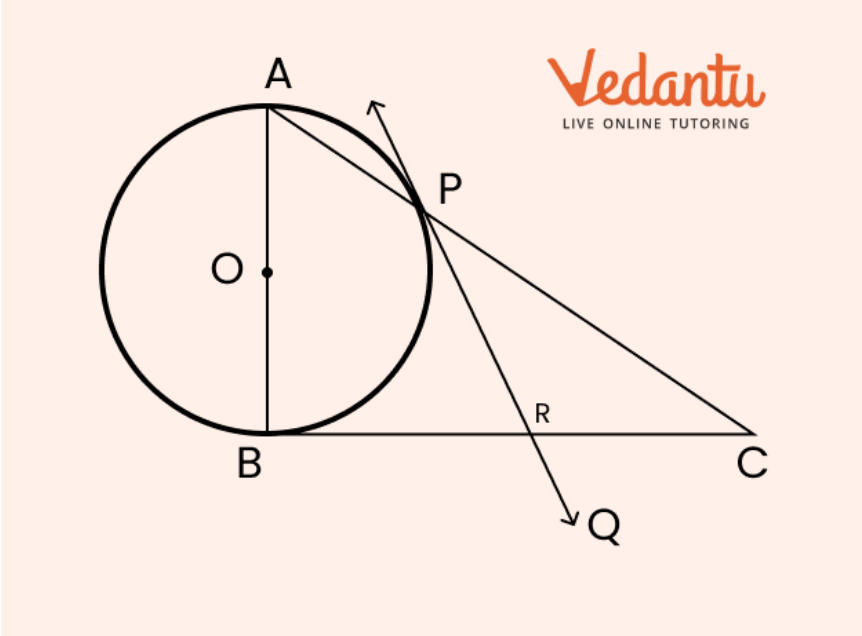

Let's break down the proof step by step:

Given:

ΔABC is a right-angled triangle at B with $\angle B = 90^\circ$.

AB is the diameter of the circle, and the circle intersects AC at point P .

A tangent is drawn at point P on the circle, and it intersects BC at point Q.

The tangent drawn at point P bisects BC, meaning BP = PC.

1. Angle in a Semicircle: Since AB is the diameter of the circle, the angle $\angle APB = 90^\circ$ because the angle subtended by a diameter on the circumference of a circle is always 90°. Thus, $\angle APB = 90^\circ$.

2. Tangents from Point on a Circle: Consider the tangent PQ drawn at point P. By the property of tangents, the tangent to a circle at any point is perpendicular to the radius at the point of contact. Therefore, $\angle OPQ = 90^\circ$.

3. Similar Triangles: Now, consider ΔAPB and ΔPQC:

In $\Delta APB, \angle APB = 90^\circ$, $\angle PAB = \theta$) (say).

In ΔPQC, $\angle PQC = 90^\circ$, and $\angle PQC = \theta$.

Since ΔAPB and ΔPQC share the same angles ($\angle APB = \angle PQC = 90^\circ$, and $\angle PAB = \angle PQC$), they are similar triangles by the AA (Angle-Angle) criterion.

4. Proportional Sides: Since the triangles are similar, the corresponding sides are proportional:

$$\frac{AP}{PB} = \frac{PQ}{QC}$$

But since AP = PB (as AB is the diameter and P is the point where the diameter intersects the circle), we have:

$$\frac{AP}{PB} = 1$$

This implies:

$$\frac{PQ}{QC} = 1$$

Hence, PQ = QC.

5. Conclusion: Since PQ = QC, the tangent drawn at P bisects BC.

Therefore, the tangent drawn at point P bisects the line segment BC. This completes the proof.

Case Study -1

13. In Mathematics, relations can be expressed in various ways. The matchstick patterns are based on linear relations. Different strategies can be used to calculate the number of matchsticks used in different figures.

One such pattern is shown below. Observe the pattern and answer the following questions using Arithmetic Progression :

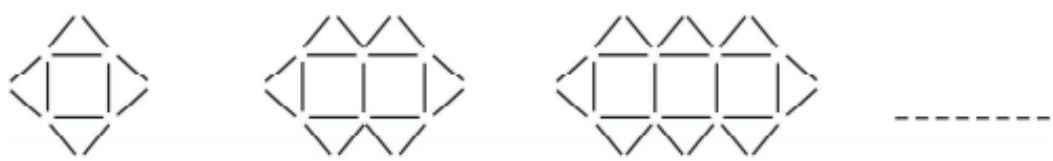

Figure 1 *Figure 2* *Figure 3*

(a) Write the AP for the number of triangles used in the figures. Also, write the nth term of this AP. 2

(b) Which figure has 61 matchsticks ? 2

Ans:

(a) Number of triangles in given figures are 4, 6, 8, ….

This is in A.P. with a = 4 and d = 2

Therefore, $a_n = 4 + (n-1) \times 2$

$a_n = 2n + 2$

(b) Number of matchsticks in figure are 12, 19, 26, ….

This is an A.P. with a = 12, d= 7

Therefore, 61 = 12 + (n – 1) × 7

61 = 12 + 7n -7

61 = 5 + 7n

7n = 56

N = 8

Case Study -2

14. Gadisar Lake is located in the Jaisalmer district of Rajasthan. It was built by the King of Jaisalmer and rebuilt by Gadsi Singh in 14th century. The lake has many Chhatris. One of them is shown below :

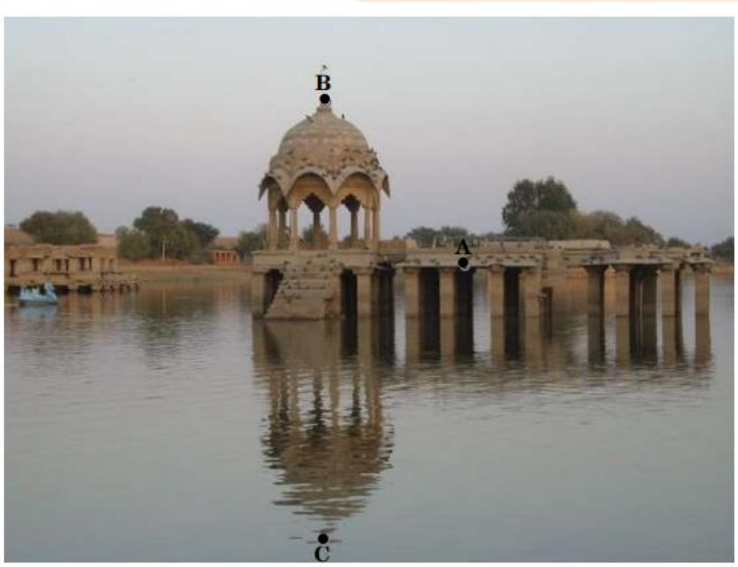

Observe the picture. From a point A h m above from water level, the angle of elevation of top of Chhatri (point B) is 45° and angle of depression of its reflection in water (point C) is 60°. If the height of Chhatri above water level is (approximately) 10 m , then

(a) draw a well-labelled figure based on the above information; 2

(b) find the height h of the point A above water level. (Use $\sqrt{3} = 1.73$) 2

Ans:

(a)

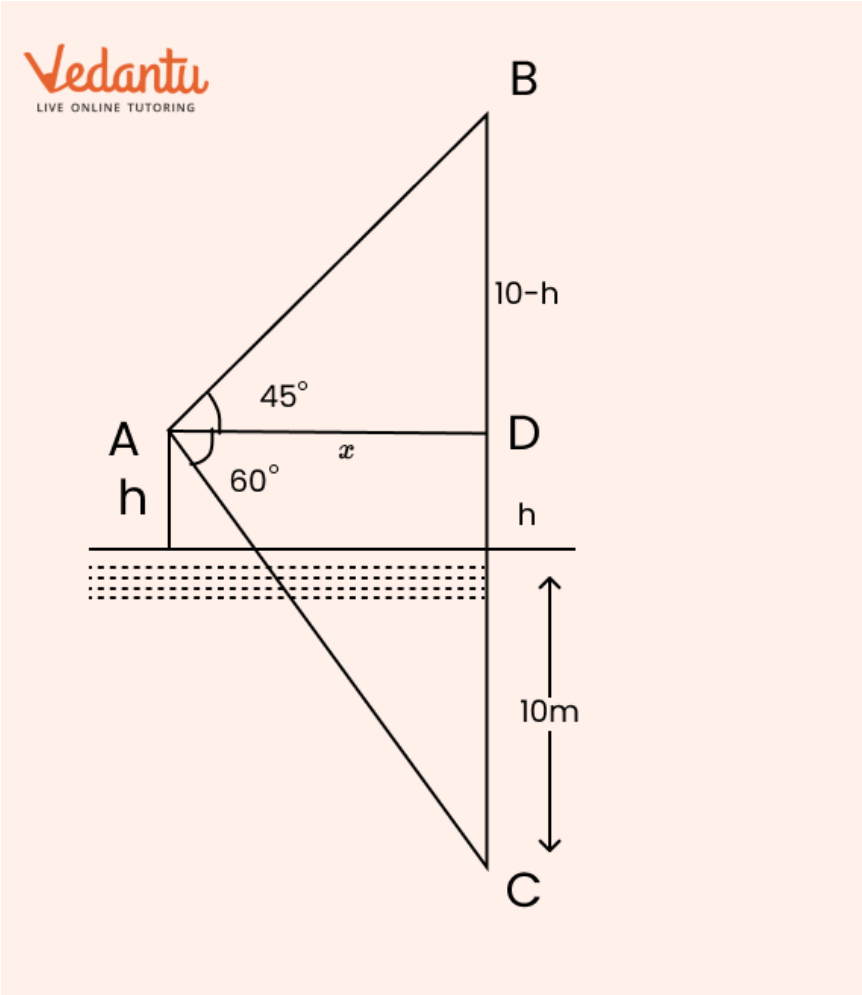

(b) tan $45^\circ = 1$

$\Rightarrow \frac{10-h}{x} = 1$

x = 10 – h ….(1)

tan $60^\circ = \sqrt{3}$

$$\Rightarrow \frac{10+h}{x} = \sqrt{3}$$

$$x = \frac{10+h}{\sqrt{3}} \qquad \ldots.(2)$$

Solving (1) and (2)

$$\frac{10+h}{\sqrt{3}} = 10 - h$$

$$10 + h = 10\sqrt{3} - h\sqrt{3}$$

$$h(1+\sqrt{3}) = 10(\sqrt{3}-1)$$

$$h = \frac{10(\sqrt{3}-1)}{(1+\sqrt{3})}$$

Multiply and divide with $\sqrt{3}-1$

$$h = \frac{10(\sqrt{3}-1)}{(1+\sqrt{3})} \times \frac{\sqrt{3}-1}{\sqrt{3}-1}$$

$$h = \frac{10(\sqrt{3}-1)^2}{2}$$

Substitute $\sqrt{3} = 1.73$

h = 2.67 m